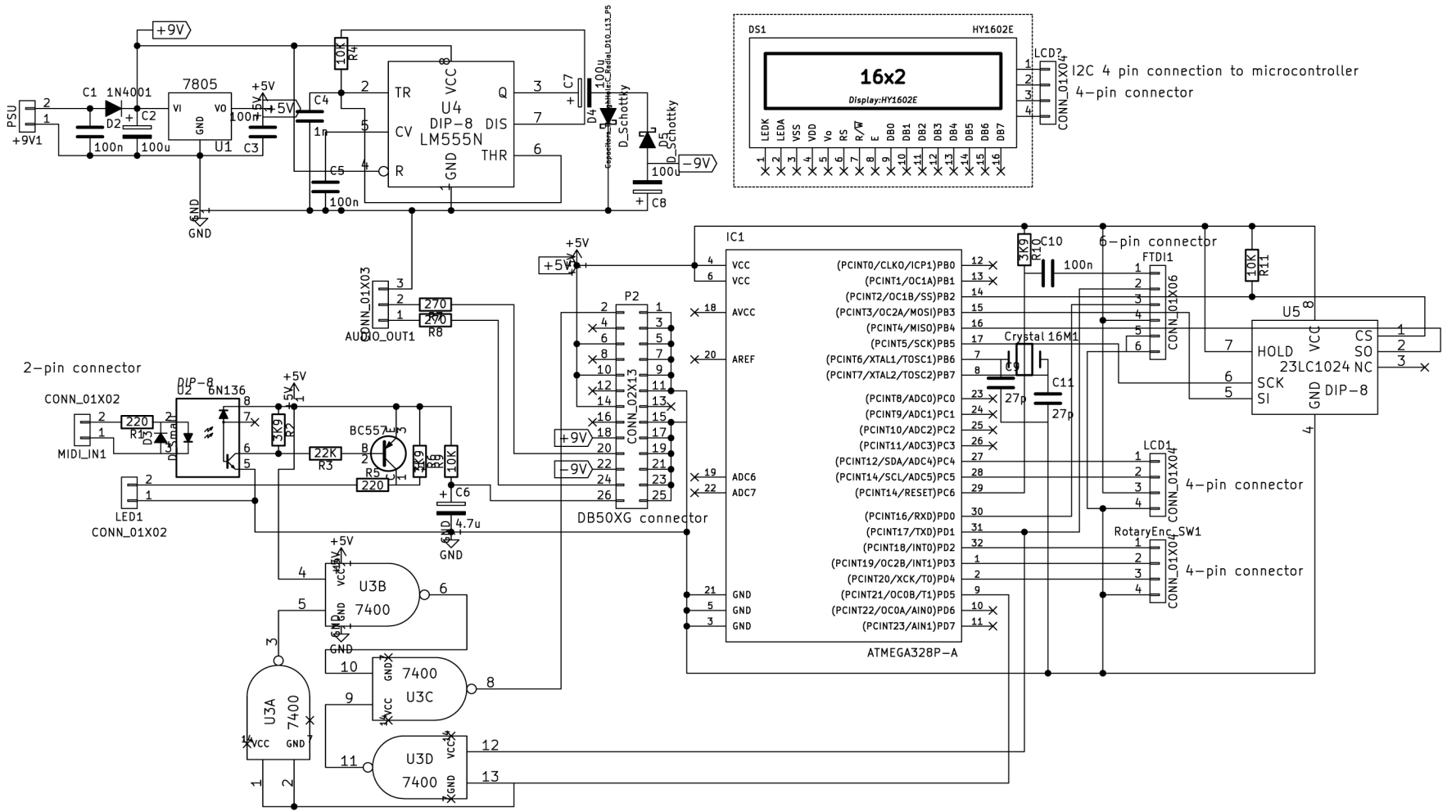
PSU
+9V1
C1 1N4001
D2
C2
100n
100u
7805
VI
VO
GND
U1
C3
100n
+9V
+5V
GND
R4
10K
C4
1n
C5
100n
U4
DIP-8
LM555N
TR
CV
R
VCC
GND
Q
DIS
THR
C7
100u
D4
D_Schottky
D5
D_Schottky
100u
C8
-9V
DS1
HY1602E
16x2
Display:HY1602E
LEDK
LEDA
VSS
VDD
Vo
RS
R/W
E
DB0
DB1
DB2
DB3
DB4
DB5
DB6
DB7
LCD?
CONN_01X04
I2C 4 pin connection to microcontroller
4-pin connector
CONN_01X03
AUDIO_OUT1
270
R7
270
R8
P2
CONN_02X13
DB50XG connector
IC1
VCC
AVCC
AREF
ADC6
ADC7
GND
(PCINT0/CLKO/ICP1)PB0
(PCINT1/OC1A)PB1
(PCINT2/OC1B/SS)PB2
(PCINT3/OC2A/MOSI)PB3
(PCINT4/MISO)PB4
(PCINT5/SCK)PB5
(PCINT6/XTAL1/TOSC1)PB6
(PCINT7/XTAL2/TOSC2)PB7
(PCINT8/ADC0)PC0
(PCINT9/ADC1)PC1
(PCINT10/ADC2)PC2
(PCINT11/ADC3)PC3
(PCINT12/SDA/ADC4)PC4
(PCINT14/SCL/ADC5)PC5
(PCINT14/RESET)PC6
(PCINT16/RXD)PD0
(PCINT17/TXD)PD1
(PCINT18/INT0)PD2
(PCINT19/OC2B/INT1)PD3
(PCINT20/XCK/T0)PD4
(PCINT21/OC0B/T1)PD5
(PCINT22/OC0A/AIN0)PD6
(PCINT23/AIN1)PD7
ATMEGA328P-A
3K9
R10
C10
100n
Crystal 16M1
C9
27p
C11
27p
6-pin connector
FTDI1
CONN_01X06
10K
R11
U5
23LC1024
HOLD
SCK
SI
VCC
CS
SO
NC
GND
DIP-8
LCD1
CONN_01X04
4-pin connector
RotaryEnc_SW1
CONN_01X04
4-pin connector
2-pin connector
CONN_01X02
MIDI_IN1
220
R1
D3
U2
6N136
DIP-8
3K9
R2
22K
R3
BC557
R5
220
R9
4K9
R6
10K
C6
4.7u
LED1
CONN_01X02
U3B
7400
U3C
7400
U3A
7400
U3D
7400